CUSTOMER DRAWING

PART NO. MG645883

GENERAL TOLERANCE (TERMINAL)					GENERAL TOLERANCE (HOUSING)							USED ON
10MAX	20MAX	45MAX	ANGLE	ECCENT	10MAX	50MAX	100MAX	250MAX	250VR	ANGLE	ECCENT	
±0.2	±0.25	±0.3	±30'	0.1	±0.2	±0.3	±0.55	±0.95	±1.4	±30'	0.1	

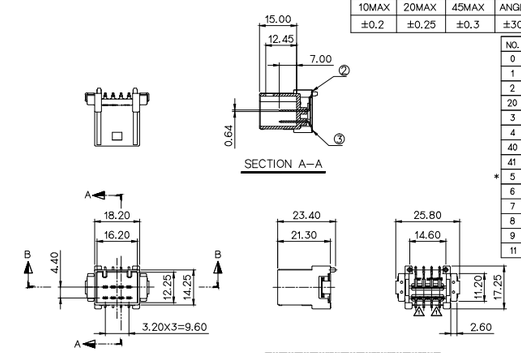

NO.	MATERIAL	COLOR
0	PPS-GF40	NATURAL
1		RED
2		BLUE
20		JADE
3		YELLOW
4		GRAY
40		DARK GRAY
41		LIGHT GRAY
* 5		BLACK
6		DARK GREEN
7		BROWN
8		LIGHT GREEN
9		MAGENTA
11		ORANGE

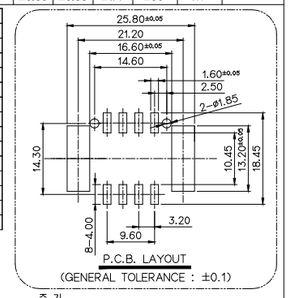

주 기

1. 기능상 유해한 BURR 및 변형이 없을것.
2. 적용 FEMALE HOUSING : MG655827
3. 단자 주석 도금 – TYPE A Sn(무광택), (MS915-01) Ni 하지 도금 + Sn(무광) + Reflow
4. 제품내 함유된 6대 유해물질 (납,수은,카드뮴,6가크롬, PBBs,PBDEs)은 EU ELV 지침 및 RoHS 법규에서 지정한 최대 허용 농도를 초과해서는 안된다.

NOTE

1. MUST BE FREE OF BURR AND IMPERFECTION THAT AFFECT FUNCTION.
2. APPLICATION FEMALE HOUSING : MG655827
3. TIN-PLATED TERMINAL – TYPE A Sn(MATTE), (MS915-01) NI-PLATED UNDER + Sn(MATTE) + Reflow
4. 6 HAZARDOUS SUBSTANCES IN PARTS (LEAD,MERCURY,CADMIUM, HEXAVALENT CHROMIUM,PBBs,PBDEs) SHALL NOT EXCEED THE MAXIMUM PERMISSIBLE CONCENTRATION PRESCRIBED UNDER EU EU ELV DIRECTIVE & RoHS REGULATION.

NO.	PART NAME	PART NO.	MATERIAL	FINISH	QTY.
①	060 8M SMD HOUSING	MG676325	SEE TABLE	SEE TABLE	1
②	060 SMD MALE TM'L (L)	ST792610-2	BRASS	Sn 후도금(무광)-Reflow	4
③	060 SMD MALE TM'L (S)	ST792611-2	BRASS	Sn 후도금(무광)-Reflow	4
④	060 SMD SIDE BRACKET	ST792612-2	BRASS	Sn 후도금(무광)	2

APPROVED
2016-03-11
KOREA ELECTRIC TERMINAL CO., LTD.
Korea Electric Terminal Co., LTD.

ISSUE MARK

LTR	REVISION RECORD	DR.	CHK.	APP.	DATE
	품번 추가 (ECO-150B-123 2016 상반 제작분)	LJY	CSH	LSY	'15.08.11
	품명 및 형상 변경 (ECO-150C-087 2014 상반 제작분)	LJY	YSW	YSW	'15.04.14

MATERIAL	SEE TABLE
FINISH	SEE TABLE
WIRE RANGE	
INSULATION	
TERMINAL APPLY. of WIRE	SEE TABLE
SCALE	1/1
DR.	LJY '14.12.31
CHK.	YSW '14.12.31
APP.	BIN '14.12.31

KET KOREA ELECTRIC TERMINAL CO., LTD.

CLASS	
TYPE	060
PART NO.	MG645883
PART NAME	060 8M SMD ASSY

DIMENSIONS IN MM